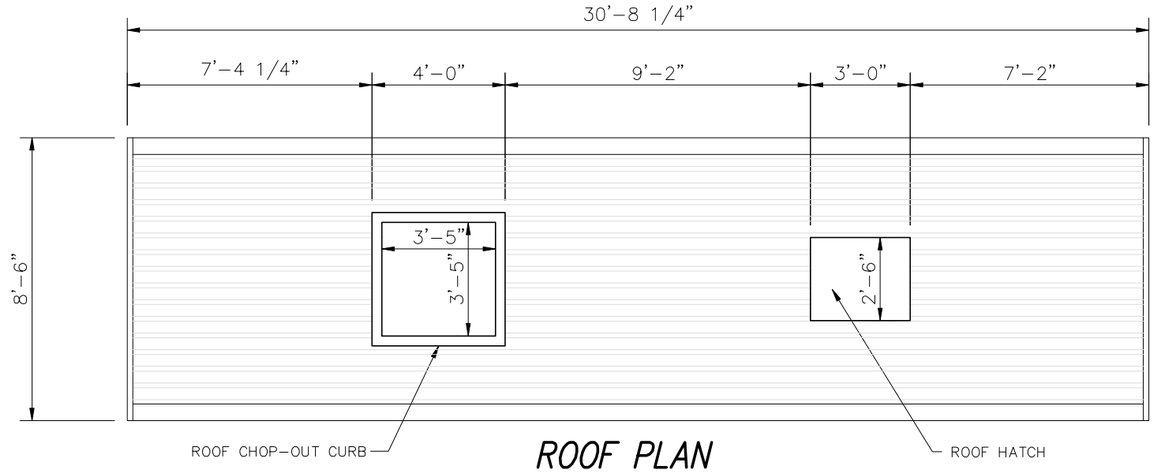

ROOF PLAN

SCALE: 1/2" = 1'-0"

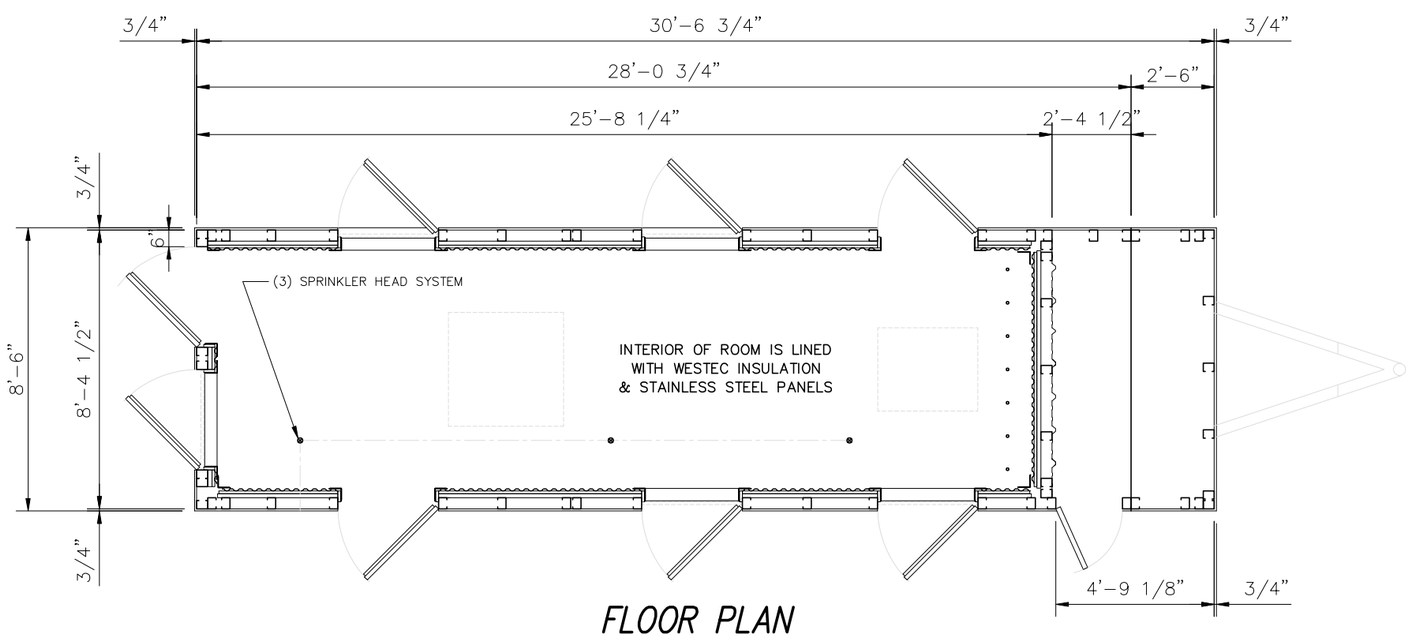

FLOOR PLAN

SCALE: 1/2" = 1'-0"

REVISIONS	by

THIS DRAWING AND ALL PARTS THEREOF IS THE EXCLUSIVE PROPERTY OF FIRE FACILITIES, INC.
314 WILBURN ROAD, SUN PRAIRIE, WI 53590
OFFICE: (608) 327-4100 FAX (608) 834-1843
AND MAY NOT BE REPRODUCED IN WHOLE OR PART WITH OUT WRITTEN PERMISSION.

FIRE FACILITIES INC.
314 WILBURN ROAD, SUN PRAIRIE, WI 53590
OFFICE: (608) 327-4100 FAX (608) 834-1843
TOLL FREE (800) 929-3726 TOLL FREE FAX (866) 839-7012

Job Description
WESCO MODEL MBR-25
TYPICAL

Sheet Title
FLOOR AND ROOF PLAN

Doc:	121808
Drawn by	
Checked by	SPW
Scale	SHOWN
Order No.	
Sheet No.	01 of 02

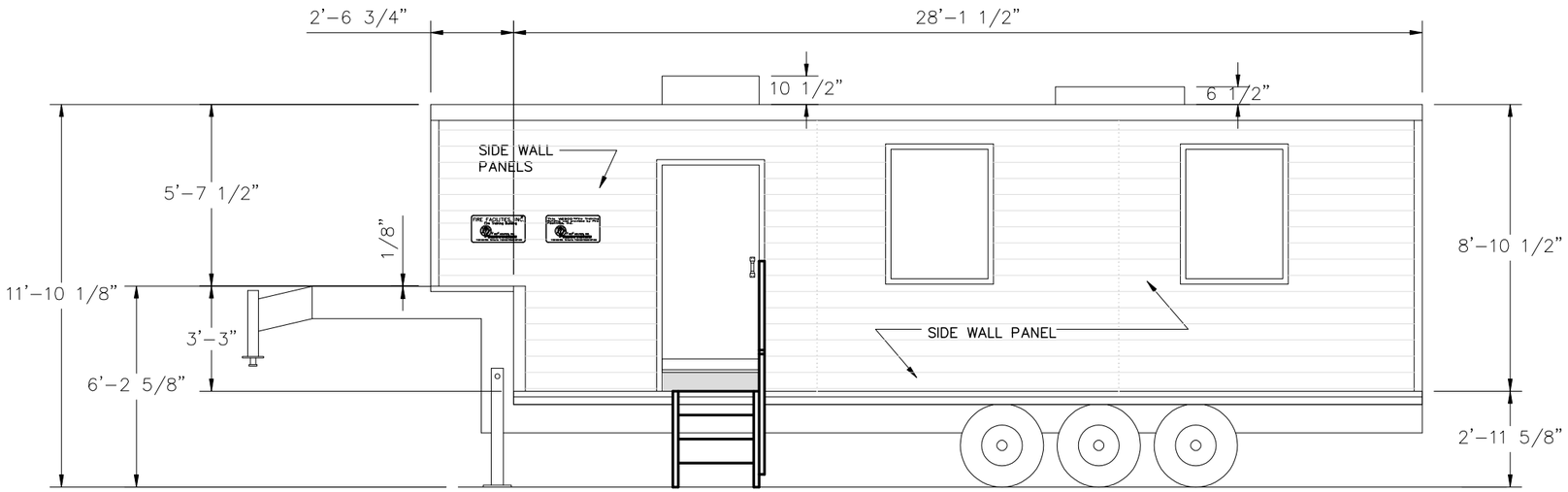

STREET SIDE ELEVATION

SCALE: 1/2" = 1'-0"

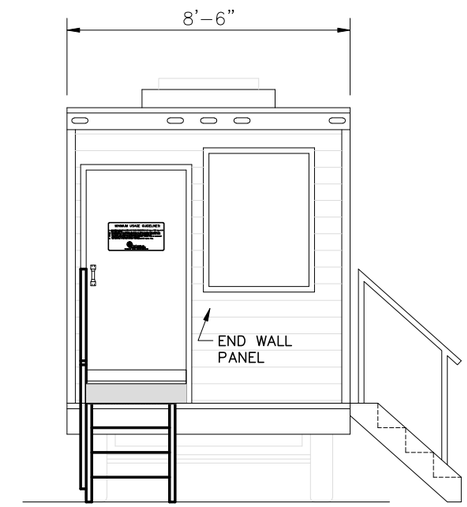

REAR END ELEVATION

SCALE: 1/2" = 1'-0"

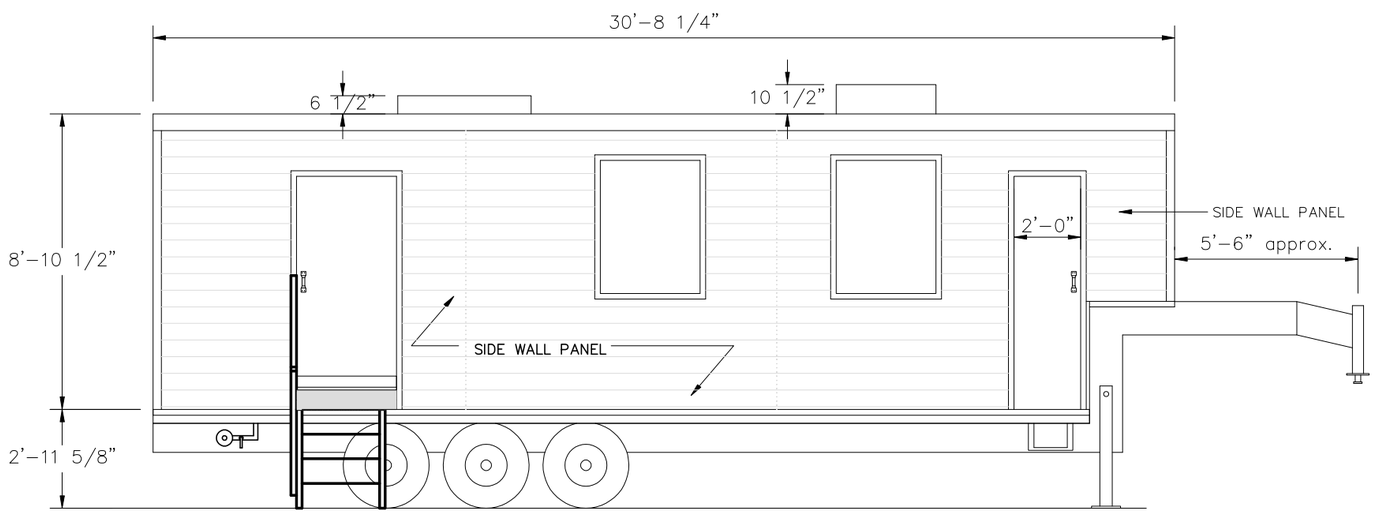

CURB SIDE ELEVATION

SCALE: 1/2" = 1'-0"

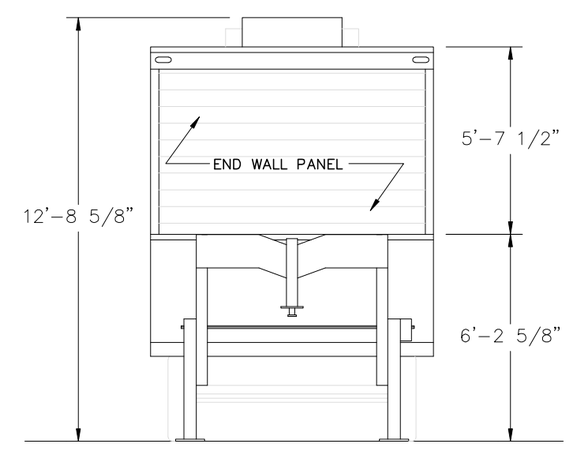

FRONT END ELEVATION

SCALE: 1/2" = 1'-0"

REVISIONS	by

THIS DRAWING AND ALL PARTS THEREOF IS THE EXCLUSIVE PROPERTY OF FIRE FACILITIES, INC.
314 WILBURN ROAD, SUN PRAIRIE, WI 53590
OFFICE: (608) 327-4100 FAX (608) 834-1843
AND MAY NOT BE REPRODUCED IN WHOLE OR PART WITH OUT WRITTEN PERMISSION.

FIRE FACILITIES INC.
314 WILBURN ROAD, SUN PRAIRIE, WI 53590
OFFICE: (608) 327-4100 FAX (608) 834-1843
TOLL FREE (800) 929-3726 TOLL FREE FAX (866) 539-7012

Job Description: **WESCO MODEL MBR-25**
TYPICAL

Sheet Title: ELEVATIONS

Doc:	121808
Drawn by	
Checked by	SPW
Scale	SHOWN
Order No.	
Sheet No.	02 of 02